LTR	REVISION RECORD	ECN NO.	DRG	DATE
A	First Issue	RD14-0625001	King	6/25'14

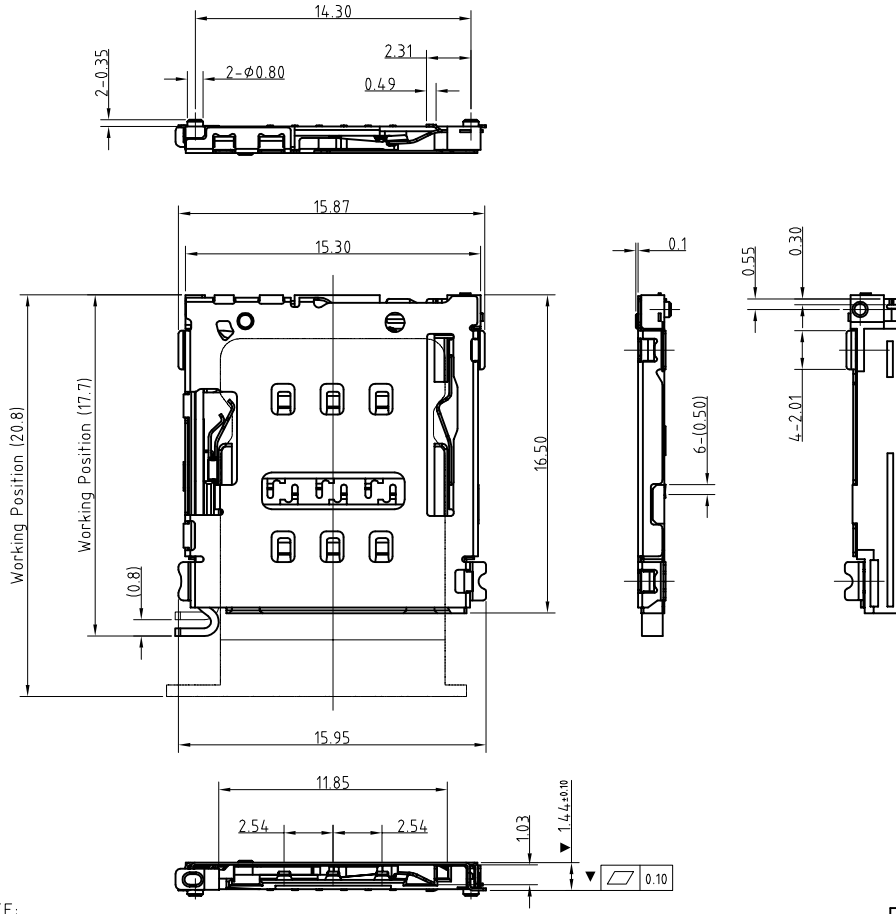

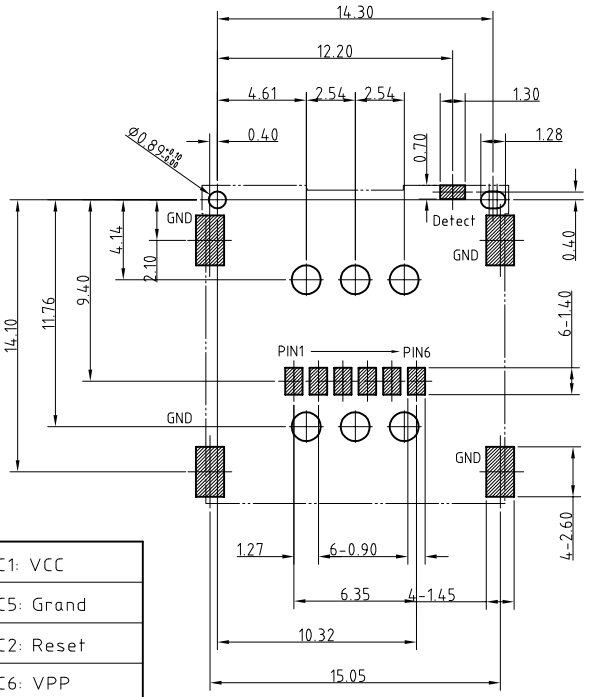

Recommended PCB Layout

Tolerance: ±0.05

PIN 1#	C1: VCC
PIN 2#	C5: Grand
PIN 3#	C2: Reset
PIN 4#	C6: VPP
PIN 5#	C3: Clock
PIN 6#	C7: I/O

NOTE:

1. Material & Finish See Table;
2. Circuit Diagram For Switch

GND —○—○— Detect	Inserted Card	
GND —○ ○— Detect	Withdrawal Card (Normal)	

3. Characteristic:
   - 3-1.Current Rating :1A max.
   - 3-2.Contact Resistance:50mOhms max
   - 3-3.Insulation Resistance:100MOhms min./500VDC
   - 3-4.Dielectric Withstanding Voltage:500VAC/1minute
   - 3-5.Mating Force: 10N Max, Withdrawal Force: 1N Min.;
   - 3-6.Durability: 1500 Cycles
   - 3-7.Operating Temperature:-25°C to+85°C
4. Critical Dimensions Marked "▼" Should Check By QC.
5. Please Contact PROMAX Sales Representive to Verify Product Details.

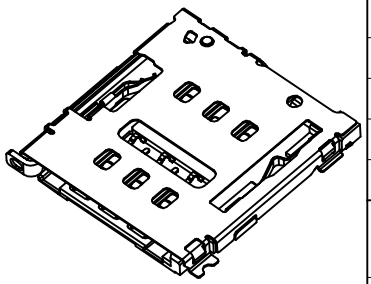

Item	Part Name	Material	Description
6	Shell	Stainless Steel	Nickel Under Plated Overall.
5	Lever	Stainless Steel	/
4	Cam	Stainless Steel	/
3	Housing	Thermoplastics	Black,UL94V-0
2	Detect	Copper Alloy	Gold Flash on Solder Tails and Contact Area; Nickel Under Plated Overall.
1	Terminal	Copper Alloy	Gold Flash on Solder Tails and Contact Area; Nickel Under Plated Overall.

CUSTOMER INSPECTION DRAWING

深 圳 市 普 玛 斯 精 密 组 件 有 限 公 司

SHENZHEN PROMAX EXACTITUDE DISCRETENESS CO.,LTD .

APPROVED:	Jean Long
CHECKED:	Jean Long
DRAWING:	King Hsu

GENERAL TOLERANCES	
.X:	±0.30
.XX:	±0.20
.XXX:	±0.10
ANGEL:	±1°
SHEET:	1 / 1

TITLE:	1.5H Nano SIM Card CONN With Detect
PART NO:	MC12-61150-7F
DWG NO:	DMC12-61150
REV: A	UNIT: mm / SCALE: / / SHEET: A4

DO NOT SCALE DRAWING

THIS DRAWING CONTAINS INFORMATION THAT IS PROPRIETARY TO PROMAX ELECTRONIC CO.,LTD.AND SHOULD NOT BE USED WITHOUT WRITTEN PERMISSION.